transformers, lines, generators, cables, bus-bars etc. need to be protected [2, 6, and 7].

The transient stability analysis which is the main concern of this work, deals with the state of the synchronous machine during a fault in the system. It gives the state and position of the load. The digital computer is an indispensable tool for power system analysis, computational algorithms for various system studies such as load flow, fault-level analysis, stability studies etc. It gives an acceptable working accuracy to the ever widening complex power system of modern times [8, 9].

1.2 THE OBJECTIVES OF THE STUDY.

These include the following:

i To determine the critical clearing angle and time of the Nigerian 330KV protection system.

ii To determine the behavior of the Nigerian power system during large scale disturbance and make necessary recommendations.

iii To specify the circuit break speeds in the system

iv To determine the available transfer capability (ATC) of the Nigerian 330KV grid system during fault and make recommendation for improvement such that the system is transiently stable.

1.3 SCOPE OF STUDY

The dissertation work covers the Nigerian 330KV power system. All the thirty-four (34) buses in the network are critically examined and analyzed with regard to transient stability .

1.4 Methodology

In this work, the composition of the Nigerian 330KV Electric power system (the national grid) is looked into and the critical clearing time and angle evaluated and determined using fourth (4th) order Runge Kutta method after obtaining power flow solution results with Ifnewton power flow program(Newton-Raphson Method) and other programs such as Lfybus, Busout, Trstab, Afpek, Dfpek, Ybusaf, Ybusbf and Ybusdf in Matlab software package environment such that the probability of total system collapse is reduced to the barest minimum.

Power holding company Plc. 330KV electrical network single Line diagram is used for this study. The generators, transmission lines and transformer parameters are taken from the most up-to-date data from National control centre, Oshogbo System Planning unit and system operations department. The subtransient reactance X^{11} of the synchronous machines is used to give maximum fault levels at the instant of fault.

The MATLAB function ode 23 will be employed to solve the 2m first order swing equation to give the desired result.

The performance of protective system during transient period will be Evaluated. Heavy Egbin – Ikeja West 330KV line will be faulted

And be removed and the system critical clearing time and angle determined such that the Nigerian power system is transiently stable thereby averting widespread black-out.

EXISITING 330KV NATIONAL GRID NETWORK

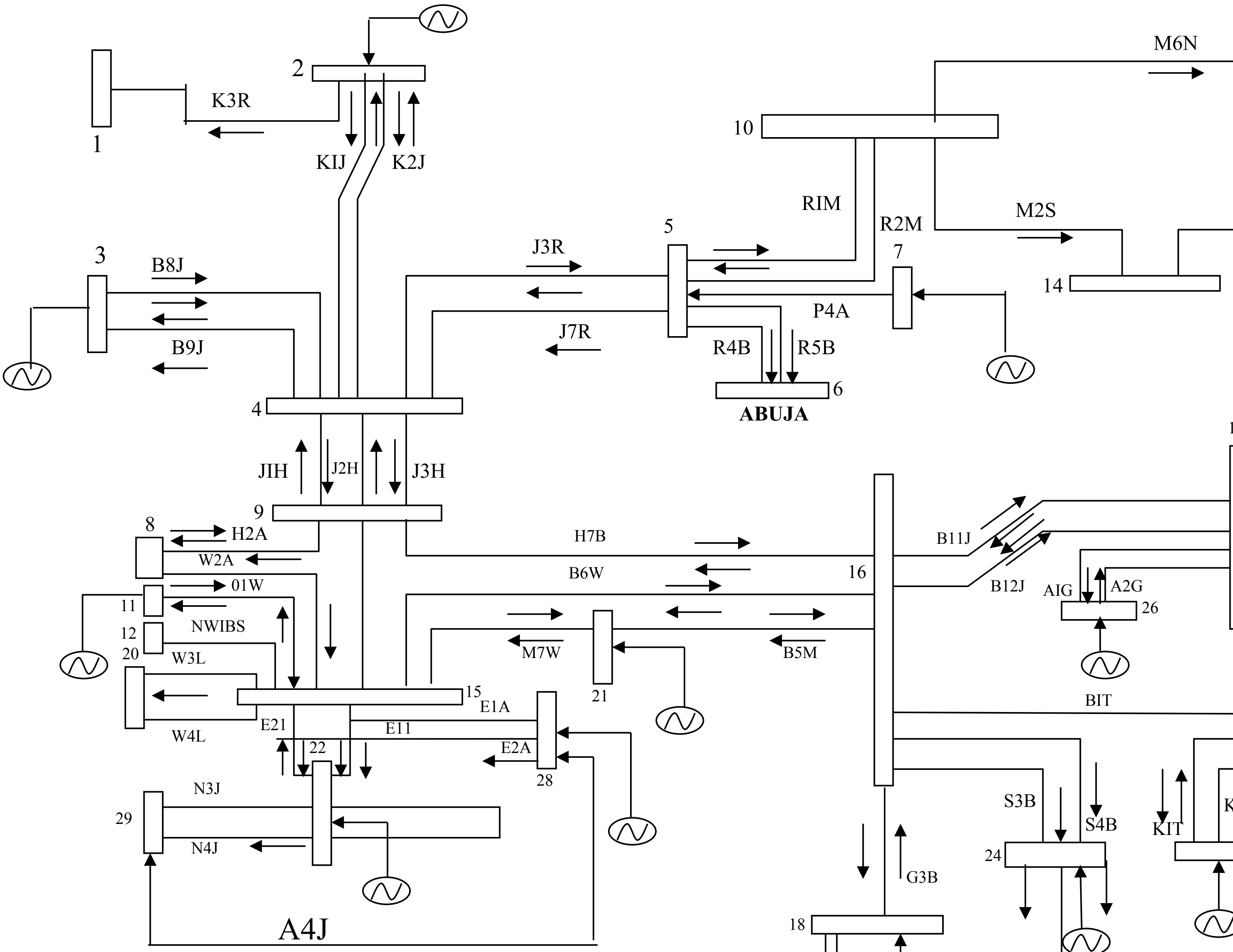

Figure 1.1 Existing 330kv National grid Network Diagram.

1.5 NEED FOR STABILITY STUDIES

In general, stability studies are very important primarily from the stand point of determining the maximum amount of power that can be transmitted without instability being incurred under steady state conditions or as a result of load changes or faults. Potential stability problems are still the most critical impediments to maximizing power transfers across interconnected power systems like the Nigerian national grid. Occurrence of transient instability problems may result to large excursions of the system machines rotor angle, and if corrective action fails, loss of synchronism among generators may result in total system collapse. Recall that in the summer of 1996, two major transient disturbances occurred in the Western system co-ordinating council in United States of America which resulted in partial black-outs that cost the power utilities and their customers several Millions Dollars[13].

In Nigeria, two system collapses within a three-day interval in March 2000, plunged the entire nation into darkness. The nation was without electricity for up to 72 hours in some areas with serious social, economic and security implications. This incident led to the sacking of the power utility [NEPA] board and the appointment of a Technical Board to oversee the day to day activities of the Authority [13, 18].

The transient stability of a power system is normally taken as very important and a major determinant of the stability of the power system because of its non-linear character, its fast evolution and its disastrous practical implications.

CHAPTER TWO

2.1 CONCEPT OF ENERGY FUNCTION MODEL IN TRANSIENT STABILITY ANALYSIS

In 1892, A.M Lyapunov, in his famous ph.D. dissertation, proposed that stability of the equilibrium of a non-linear dynamic system of dimension n can be ascertained without numerical integration.

According to this model, the critical clearing time of a circuit breaker can be interpreted in terms of meaningful quantities such as Maximum power transfer in the pre-fault state.

$\dot{x} = f(x), f(0) = 0$ .... (2.1)

He said that if there exists a scalar function $V_{(x)}$ for equation (1) that is position definite, for $V_{(x)} > O$ around the equilibrium point "O" and the derivative $\dot{V}_{(x)} < O$, then the equilibrium is asymptotically stable.

$\dot{V}(x)$ *is obtained as* $\sum_{i=1}^{n} \frac{\partial v}{\partial x_i} \dot{x}_i =$

$$\sum_{i=1}^{n} \frac{\partial v}{\partial x_i} f_i(x) = \nabla V^T . f(x) \text{ ------------ } (2.2)$$

Where n is the order of the system in (2.1)

Furthermore, in 1948, the application of the energy function model to power system stability actually began with the early work of Magusson and Aylett, followed by a formal application of the more general Lyapunov's model by EL-Abad and Nagappan[19]

2.2 MODELLING ISSUES

A Power system undergoing a disturbance can be described by a set of three differential equations:-

$$\dot{x}_{(t)} = f^{1}\ (x_{(t)}) \quad -\infty < t \leq 0 \ldots\ldots\ldots\ldots\ldots\ldots\ldots\ldots(2.3)$$

$$\dot{x}_{(t)} = f^{f}(x_{(t)})\ O \ < t \leq t_{cl} \ldots\ldots\ldots\ldots\ldots\ldots\ldots\ldots\ldots\ldots(2.4)$$

$$\dot{x}_{(t)} = f\,(x_{(t)})\ t_{cl}\ < t < \infty \quad \ldots\ldots\ldots\ldots\ldots\ldots\ldots\ldots\ldots(2.5)$$

$x_{(t)}$ is the vector of state variable of the system at time t. At t = 0, a fault occurs in the system and the dynamics change from f^1 to f^f.

During $0<t \leq t_{cl}$, called the faulted period, the system is governed by the fault – on dynamics if actually, before the fault is cleared at $t = t_{cl}$, we may have several switching in the network, each giving rise to a different f^f.

For simplicity, we have taken a single f^f, indicating that there are no structural changes between t = 0 and $t = t_{cl}$. When the fault is cleared at $t = t_{cl}$, we have the post fault system with its dynamics f^1 $(x_{(t)})$.

However, the energy function methods have proved to be reliable after many decades of research for single machine system but for multi-machine system with complex network like that of Nigerian 330KV power system network, the value of the t_{cl} is not as reliable as that got with numerical integration method with digital computer. More research is still going on, on multi-machine system on this concept. [19]

2.3 NUMERICAL METHODS

Differential equations' solution is highly restricted to the employment of numerical methods since accuracy is needed. In stability studies, non-linear highly-dimensional mathematical problems are encountered hence engineers resort to using numerical methods in their analysis. Numerical methods for the analysis of the steady state and dynamic (transient) behaviour of power system network are listed below:

2.3.1 STEADY STATE ANALYSIS.

This is done by four methods viz:

1. Gauss – Elimination Method.
2. Grammar's rule.
3. Gauss – Jordan method.
4. Newton's method.

The first three methods are suitable for linear expressions while the last two methods are suitable for linear and non-linear expressions.

2.3.2 DYNAMIC (TRANSIENT) STATE ANALYSIS

Nine methods are available for this analysis namely:

1. Euler method.
2. Improved Euler method.
3. Euler-Cauchy.
4. Adams-Bash forth fourth-order method.
5. Adams-Moulton fourth-order.

6. Gear's method.
7. Finite Difference method.
8. Fourth-order Runge-Kutta method.
9. Crank-Nicolson method.

   Note: Crank-Nicolson and finite difference methods are mainly used for the analysis involving partial differential equations, while the rest seven methods are very suitable for analysis involving-ordinary differential equations. [20]

2.3.3 RUNGE-KUTTA METHOD

One of the popular and most accurate, numerical procedures or methods used in cracking a system of differential equation is the fourth-order Runge-Kutta method. There are different orders of this Runge-Kutta method but the interesting thing is that they are derived using the Taylor's series-expansion with remainder of function y(x).

The first order Runge-Kutta method is normally and basically the same with basic Euler method. The second order Runge-Kutta method is the same with improved Euler method. The fourth order Runge-kutta solution to a system equation is as follows:

$$Y(x) = y_{(a)} + y_{(a)}^{1}\frac{x-a}{1!} + y_{(a)}^{11}\frac{(x-a)^2}{2!} + \ldots Y_{(c)}(k+1)\frac{(x-a)}{(k+1)!}k+1 \quad \ldots\ (2.6)$$

Where c is some number between a and x boils down to:

$$Y_{n+1} = y_n + a_{k1} + b_{k2} + ck_3 + dk_4 \quad \ldots\ (2.7)$$

Where :

$$K_1 = hf(X_n, Y_n)$$

$$K_2 = hf(X_n + 0.5h,\ Y_n + 0.5K_1)$$

$$K_3 = hf(X_n + 0.5h,\ Y_n + 0.5K_2)$$

$$K_4 = hf(X_n + h,\ Y_n + K_3)$$

This agrees with a Taylor Polynomial of degree 4.

The final solution formula for using in system analysis gives:

$Y_{n+1} = Y_n + 1/6\ [K_1 + 2k_2 + 2K_3 + k_4]$ ----------------- *(2.8)*

Careful look at the analysis of equation (6) shows that K_2 depends on K_1, K_3 depends on K_2 and K_4 depends on K_3. This method amongst all other methods allows usage of variable step size and this improves accuracy of result. ***k1 is the slope @ the beginning of time step, k2 is the first approximation to the slope @ midstep, k3 is the second approximation to slope @ midstep While k4 is the slope @ the end step. Yn+1 is the incremental value of Y given by the weighted average of estimates based on slopes @ the beginning, midstep, and end of the time step.***

In this work, Runge-Kutta has been chosen for the stability assessment of the Nigerian-Electric Power System based on the following advantages it gives;

a. The method is inherently self-stating and this quality directly ceases the handling of discontinuities and the adjustment of step length where required ("easy for all automatic error control")

b. It has high accuracy when the step can be made small.

Moreover, since this is a stability study which needs knowledge of steady-state initial-condition values before starting transient-stability integration, Runge-Kutta method was chosen.

c. Experiments have shown that several applications of a corrector say three applications have to be made to match accuracy obtained using Runge-Kutta method. This exhibits it's time saving quality.

d. Easy to program for s digital computer and are always designed to give greater accuracy [21], [23].

2.4 NIGERIAN NATIONAL GRID

The Nigerian National Grid is being run and controlled by Power Holding Company of Nigerian PLC (PHCN), formally known as National Electric Power Authority (NEPA). The Nigerian National Grid System has a total of fourteen (14) Generating Power stations: Namely:- Kanji, Jebba, Shiroro, Ascon, Egbin, AES, Delta, Okpai, Afam, Sapele, Omotosho, Olorunsongo, Omoku and Geregu [10, 12, 13]. The national grid is made up of interconnected network of 5000km of 330KV transmission lines.

The control of the grid is affected by eight (8) Regional control centers (RCC) located at Lagos, Oshogbo, Benin, Enugu, PortHarcourt, Bauchi, Kaduna and Shiroro. Shiroro is normally taken as sub-National control center (SNCC). The operations in these regional control centers (RCC) are co-ordinated, directed and supervised by the National control center at Oshogbo [14,15].

The radial nature of most stations in the National gid has made some of the transmission lines very important and critical to the integrity of the whole grid. These lines are Egbin – Ikeja West line, Benin – Ikeja West line, Benin – Onitsha line, Jebba – Oshogbo line and lastly the Oshogbo – Benin line. This could be clearly seen from fig. 1.1. above. Records show that Lagos area consumes about 55% of the total generated power [16]. These critical lines once disturbed, reflect heavily on the whole power system most at times lead to a total system outage. This situation critically affects the stability of the system. The size of disturbance or fault distinguishes between

small disturbance stability and large disturbance stability. Small disturbance stability is usually handled or solved by the linearization of dynamic equations of motion while the large disturbance stability requires non-linear approaches [17].

2.5 BASIC CONCEPTS OF STABILITY STUDIES

On commercial power systems, the large machines are of the synchronous type; these include substantially all of the generators and condensers, and a considerable part of motors

On such systems it is necessary to maintain synchronism between the synchronous machines under steady-load conditions. Also, in the event of transient disturbance, it is necessary to maintain synchronism; otherwise a standard of service satisfactory to the user will not be obtained.

These transient disturbances can be produced by load changes, switching operations and particularly faults and loss of excitation. Thus, maintenance of synchronism during steady-state conditions and regaining of synchronism or equilibrium after a disturbance are of prime-importance to the electrical utilities. Electrical manufacturers are likewise concerned because stability considerations determine many features of apparatus and under many conditions affect their cost and performance. The characteristics of virtually every element of the system have an effect on stability. It introduces important problems in the co-ordination of electrical-apparatus and lines in order to provide, at lowest cost, a system capable of carrying the desired-

loads and of maintaining a satisfactory-standard of service, both for steady-state conditions and at times of disturbances [22], [23].

2.6 ESSENTIAL FACTORS IN THE STABILITY PROBLEM

The essential factors in the stability problem are illustrated in connection with the two machine system shown schematically below in figure 2.21.

The various elements of the system; prime mover synchronous generator, reactance line, synchronous motor, and the shaft load, are indicated:-

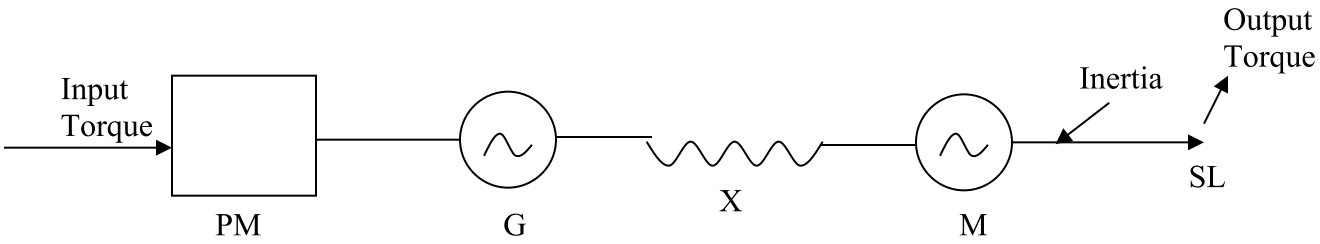

Figure 2.1: Various elements of Power System Network

PM	-	Prime Mover
G	-	Synchronous Generator
X	-	Reactance of the Line
M	-	Synchronous Motor
SL	-	Shaft Load

2.6.1 FACTORS AFFECTING STABILITY

These factors are the mechanical and electrical factors.

The essential mechanical factors include:

i. Prime Mover:- Turbine

ii. Inertial:- Mover of Turbine (crank shaft of the motor)

iii. Shaft:- Load out-put torque

The essential Electrical factors include:

i. Internal voltage of Synchronous generator

ii. Reactance of the system V_{iz}: Generator, line and motor.

iii. Internal voltage of Synchronous motor [22]

2.6.2 POWER CIRCLE DIAGRAM AND POWER ANGLE CURVE.

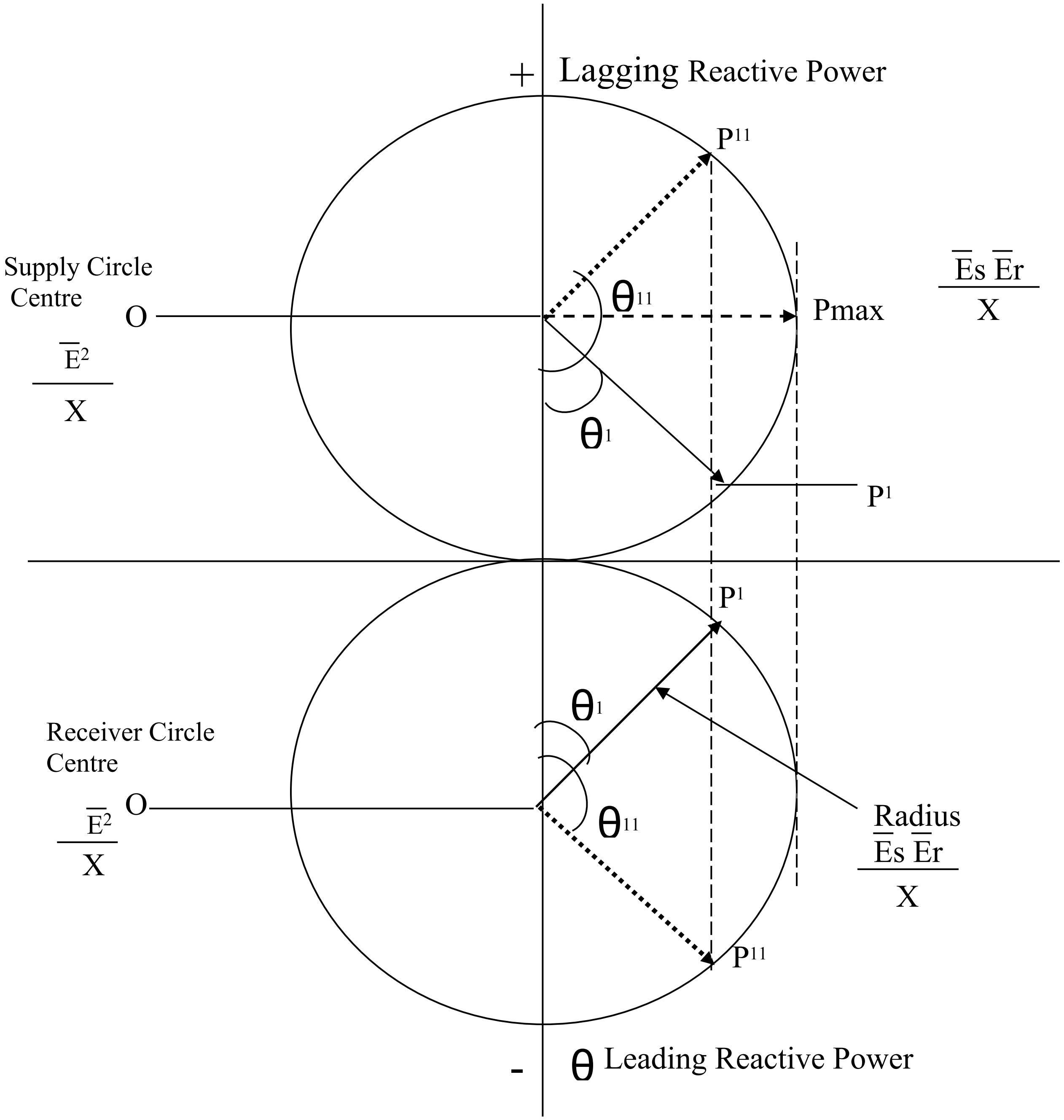

Figure 2.2: Power Circle Diagram